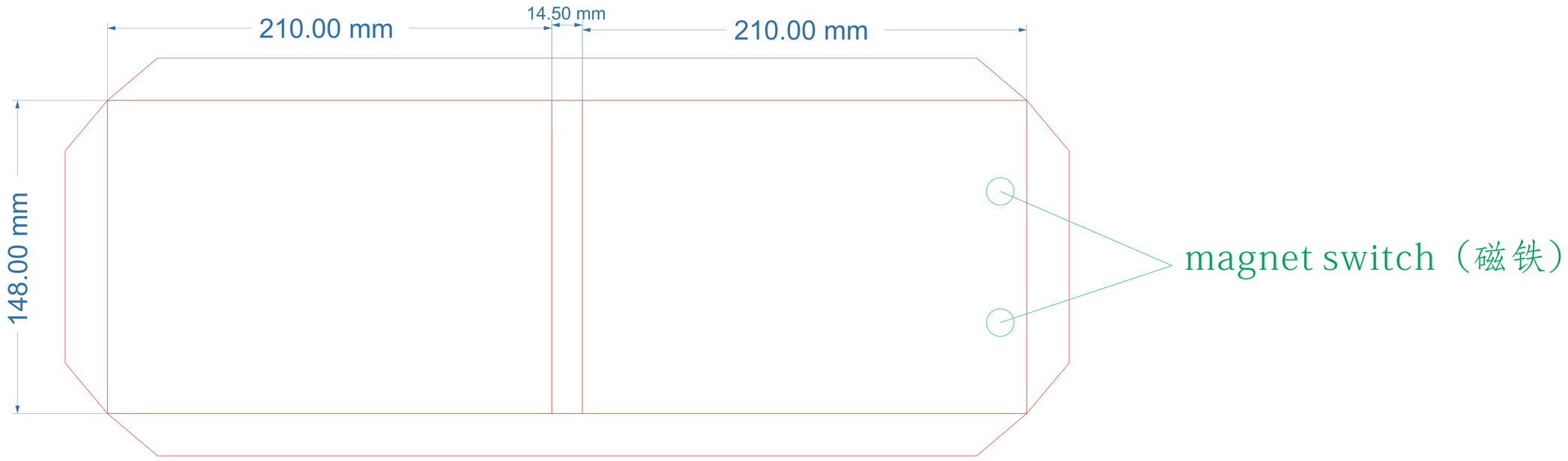


Back cover

Front cover

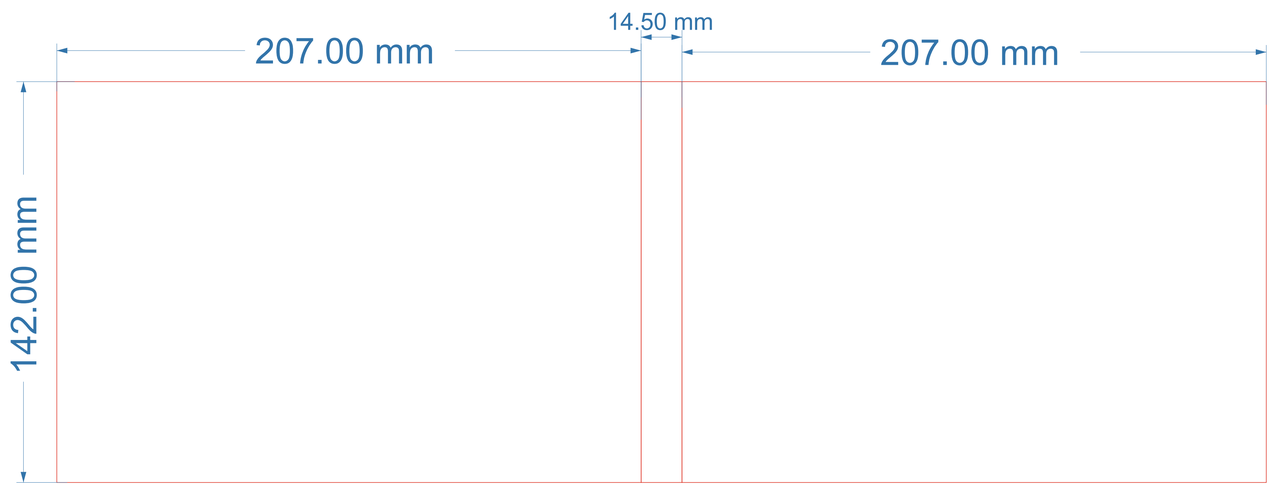


Inside front cover

Screen Part

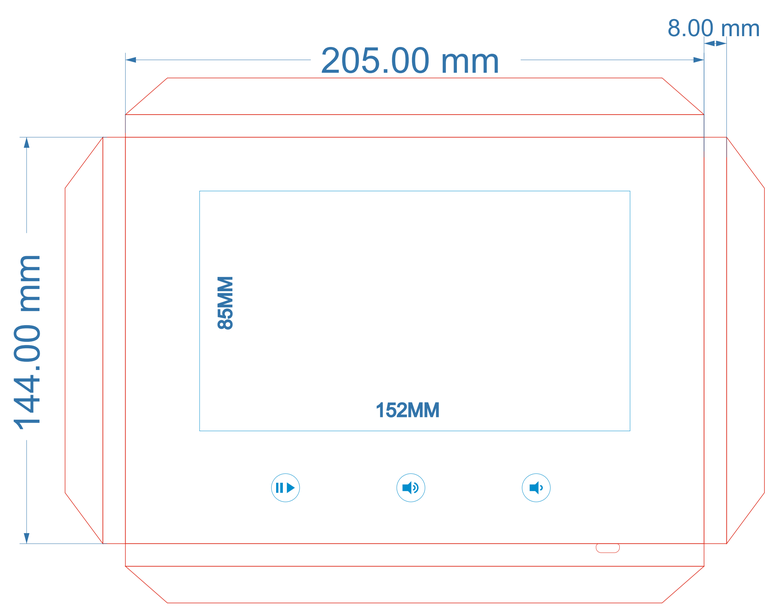


Screen Part