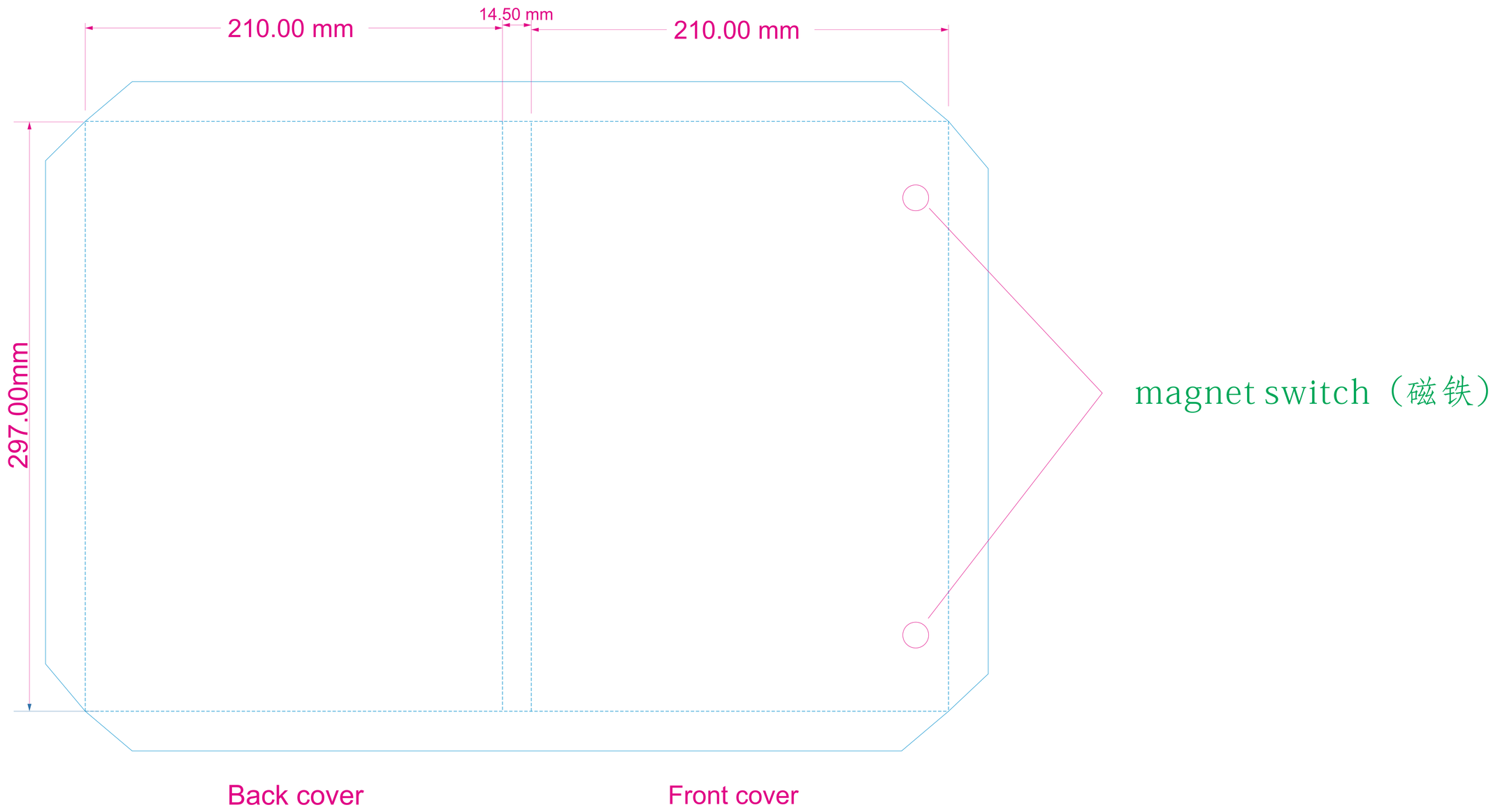
210.00 mm
14.50 mm
210.00 mm
297.00mm
magnet switch（磁铁）
Back cover
Front cover

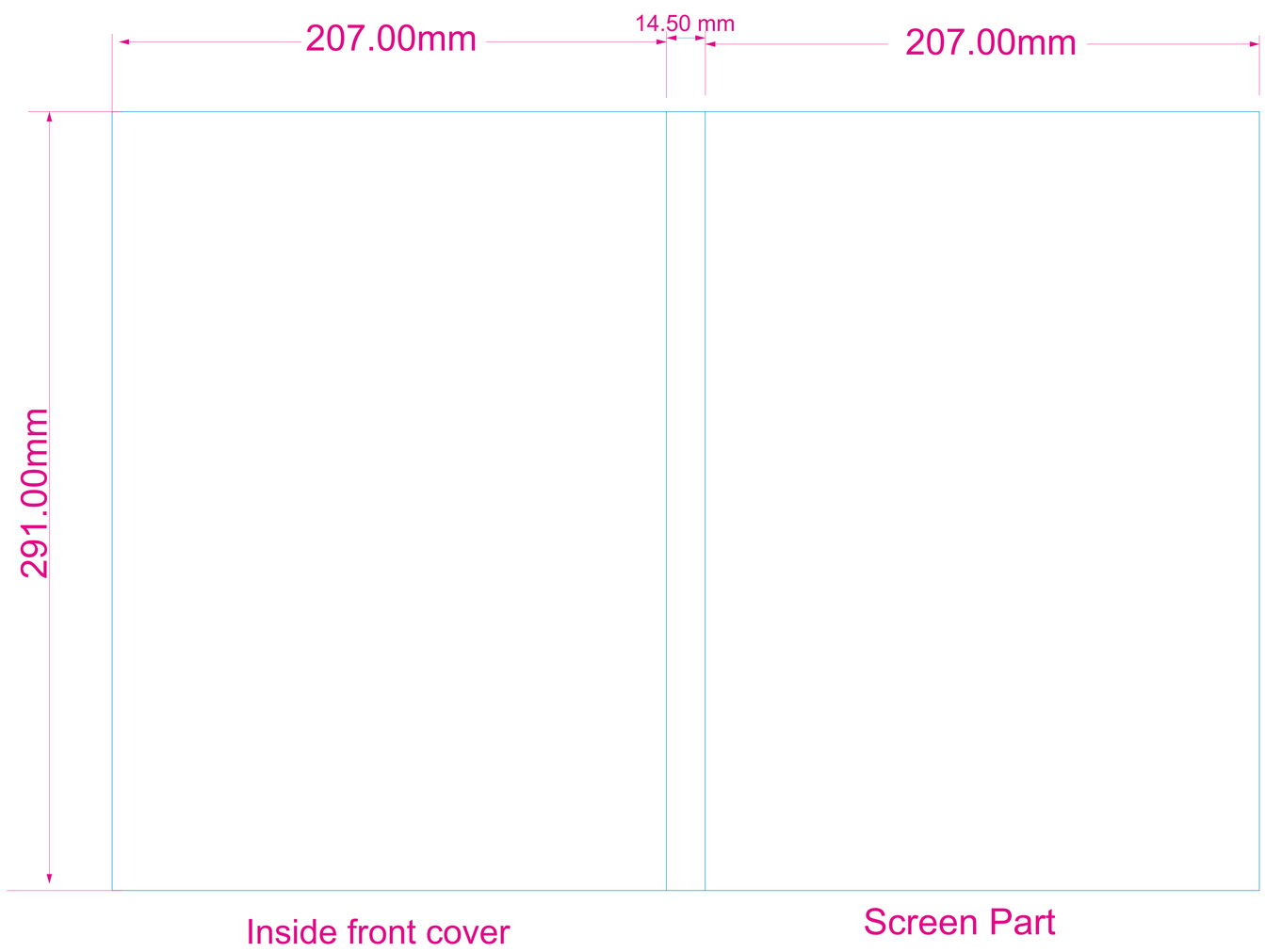
207.00mm
14.50 mm
207.00mm
291.00mm
Inside front cover
Screen Part

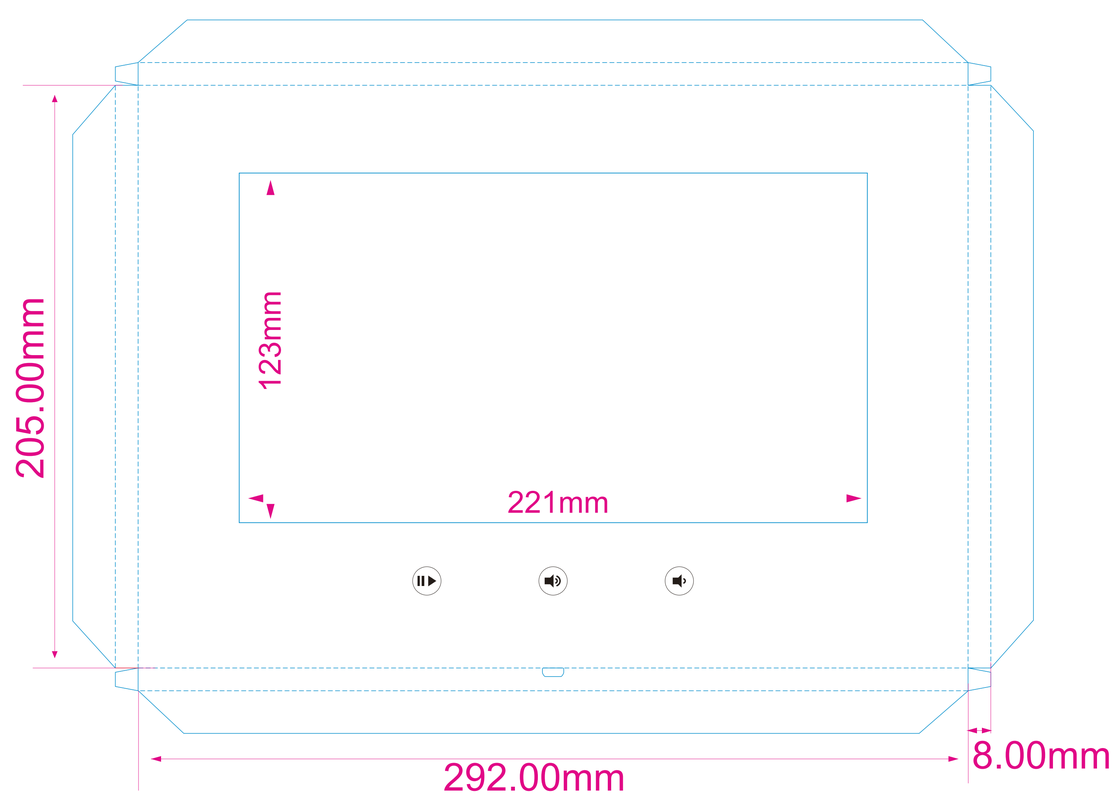
205.00mm
123mm
221mm
292.00mm
8.00mm